ZEN

1x 40 Watt / 2700 K - 4000K / 95CRI





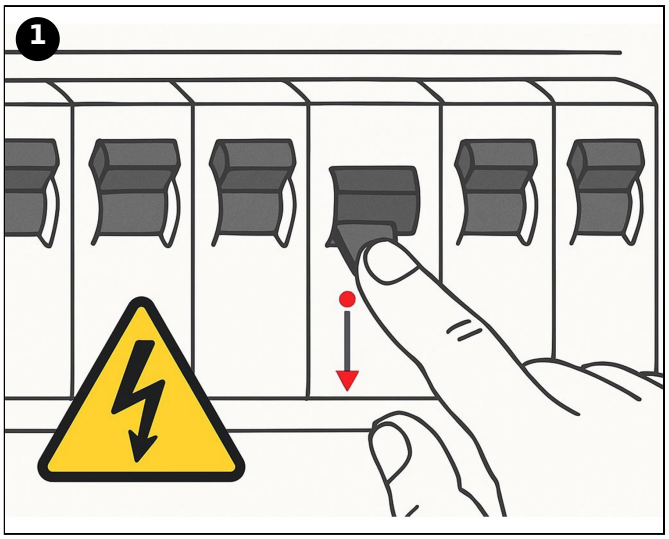

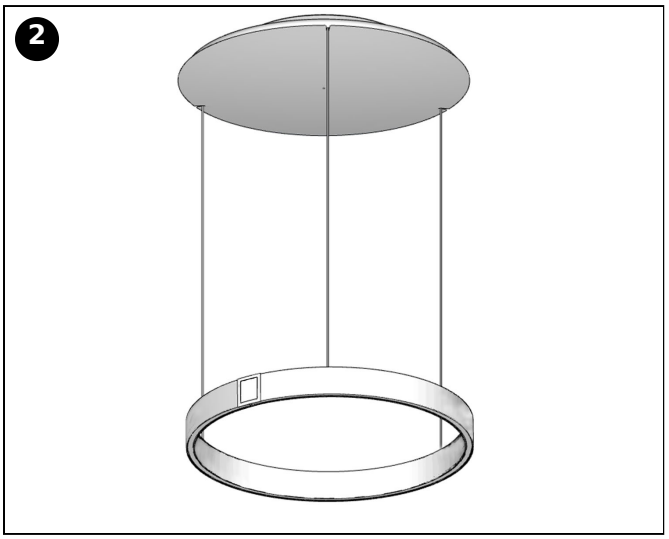

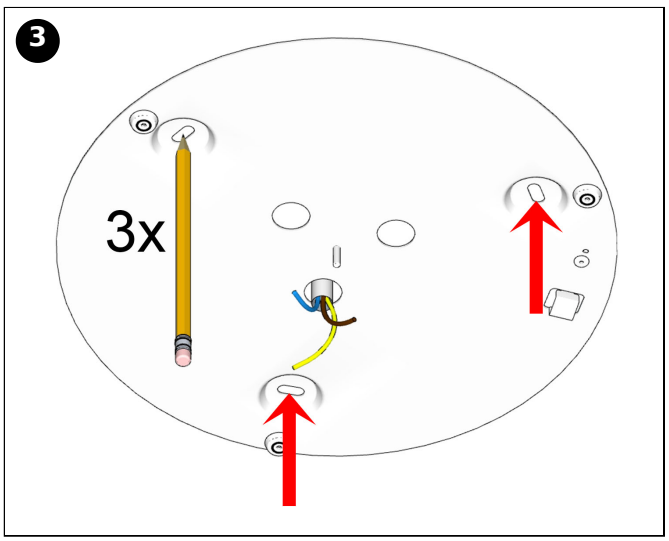

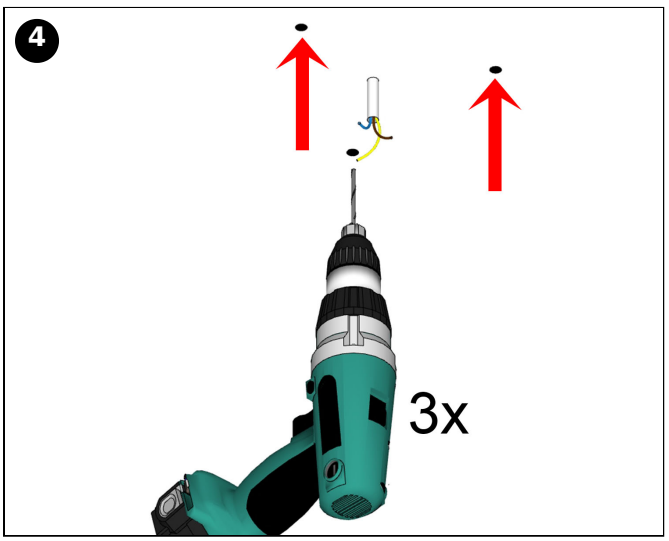

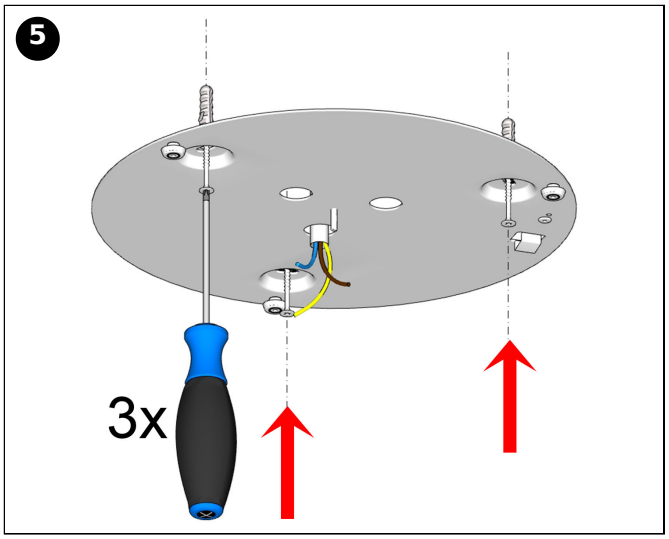

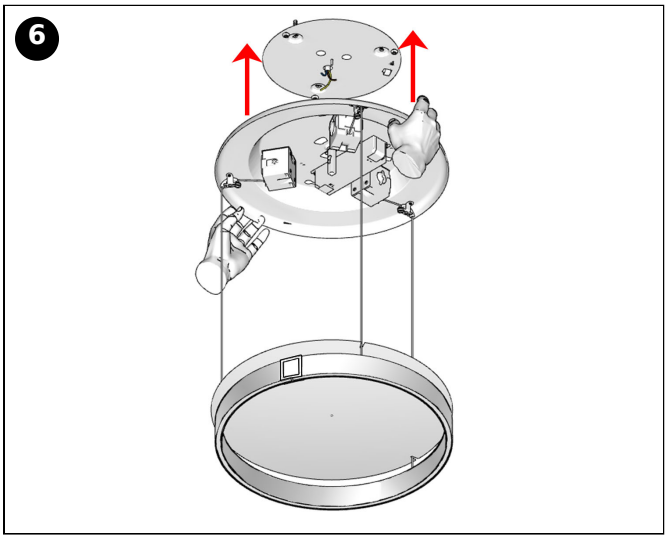

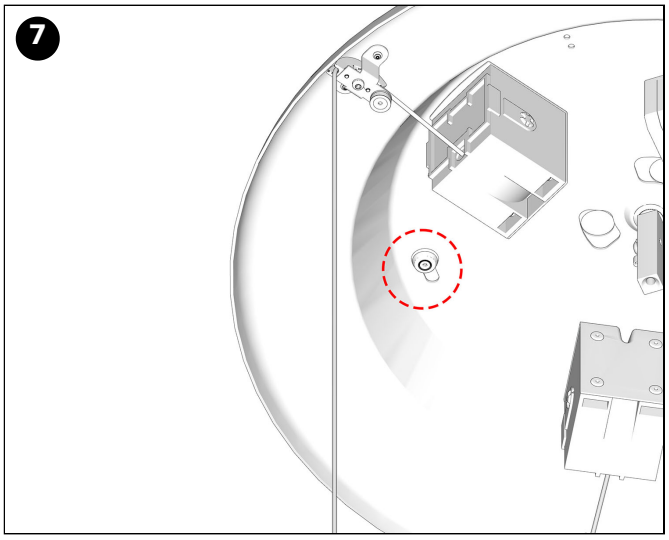

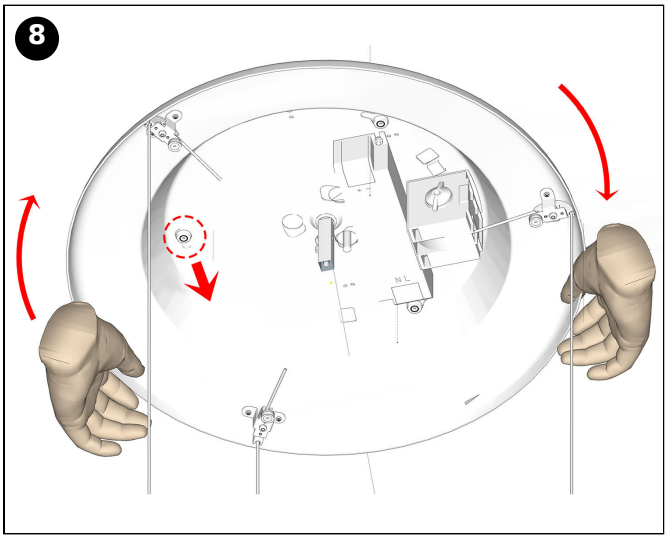

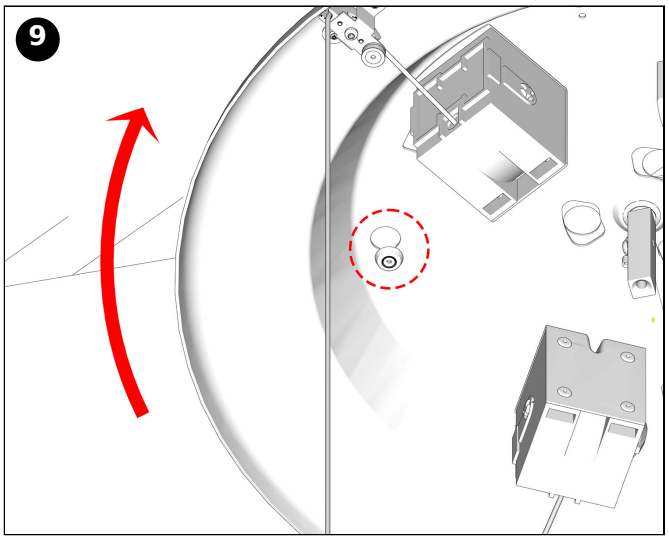

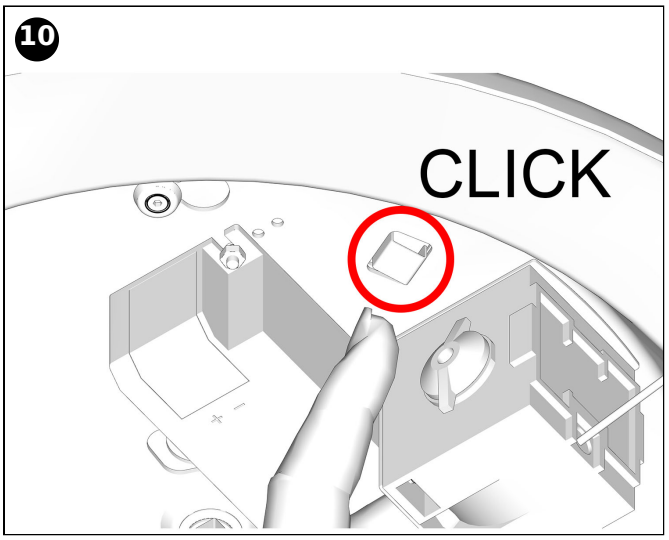

Top Light GmbH & Co.KG
Industriezentrum 100 | 32139 Spenge | Germany
Tel. +49 (0) 5225 / 863 12-0 | E-Mail brief@top-light.de
24.11.2026 11:27

11

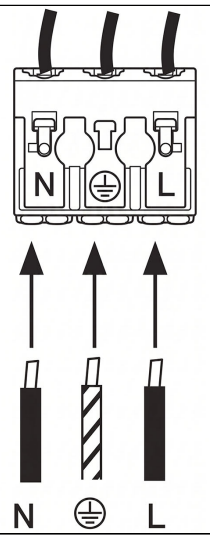

12

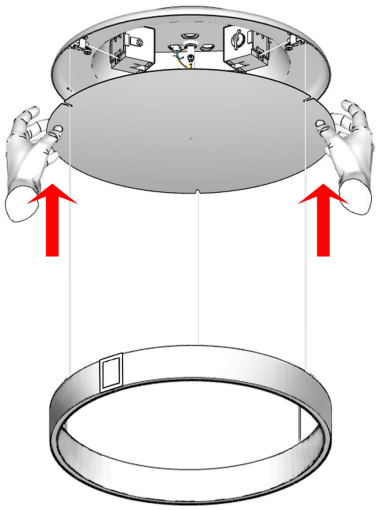

13

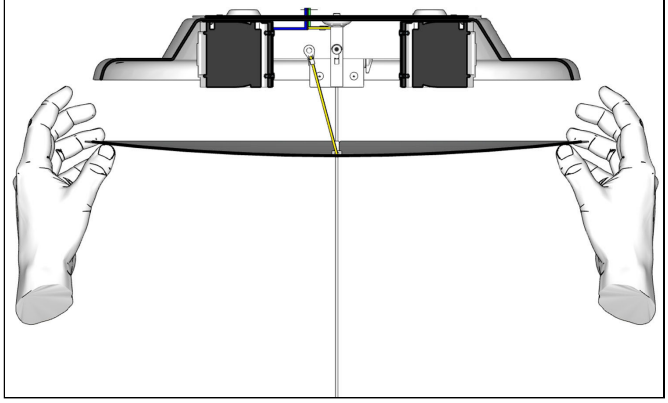

14

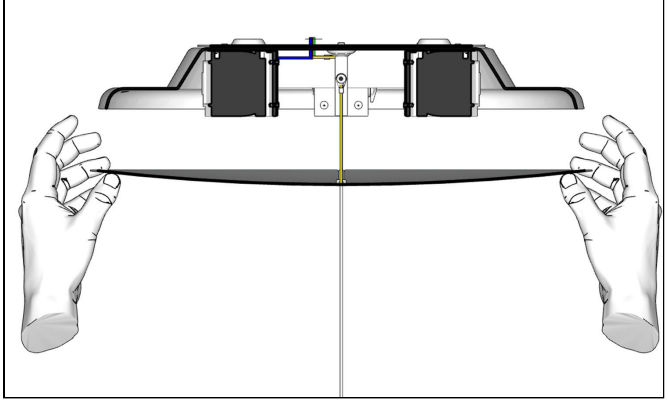

15

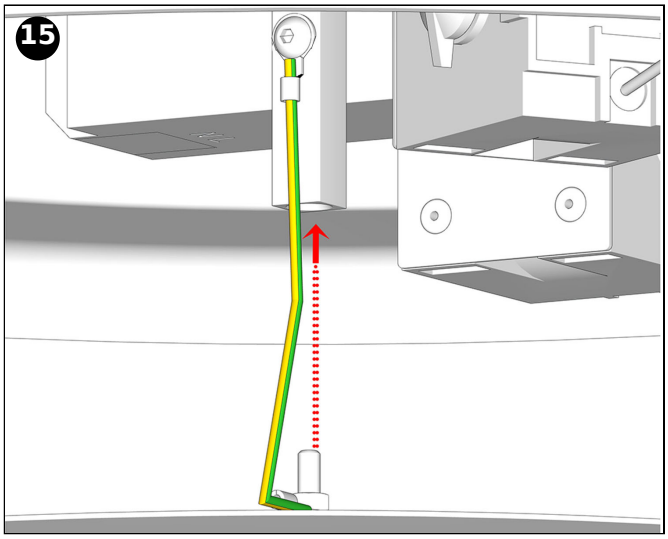

16

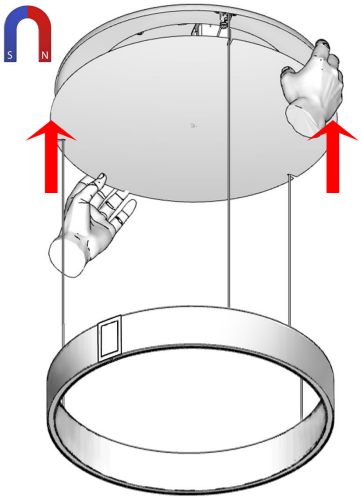

Top Light GmbH & Co.KG
Industriezentrum 100 | 32139 Spenge | Germany
Tel. +49 (0) 5225 / 863 12-0 | E-Mail brief@top-light.de
24.11.2026 11:27

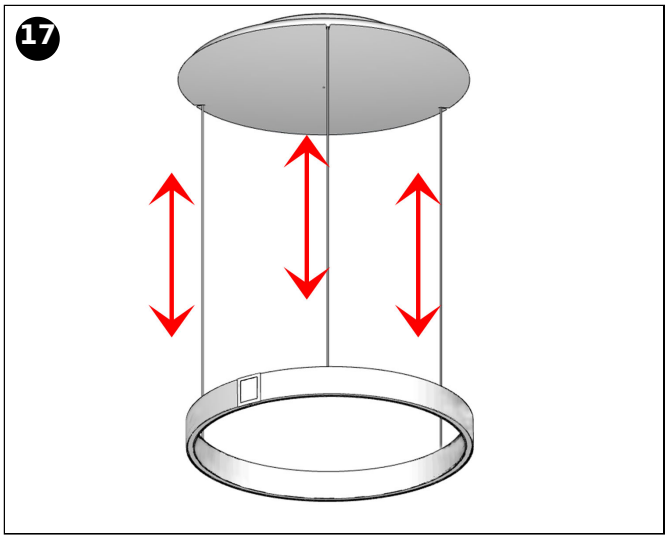

Top Light GmbH & Co.KG
Industriezentrum 100 | 32139 Spenge | Germany
Tel. +49 (0) 5225 / 863 12-0 | E-Mail brief@top-light.de